Door latches

Locking set 27mm SS, w/270mm Push handle w/ Key

Product code: 161202004 Old product code: 103610/18011

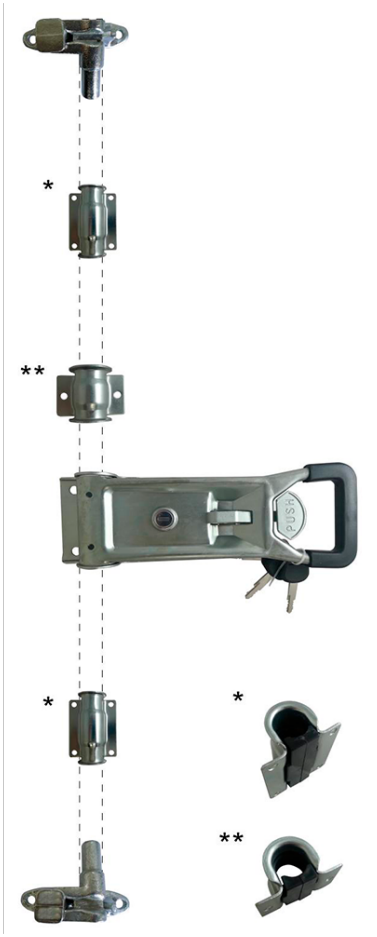

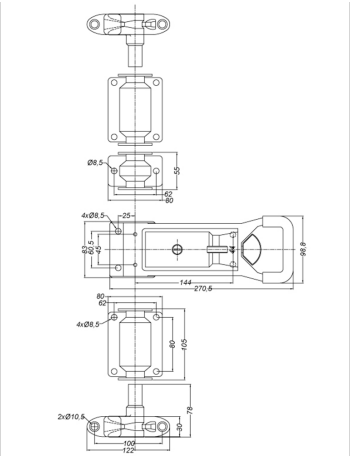

Weight: 4.5 kg

Oy Parlok Trading AB
Askonkatu 13
FI-15100 LAHTI
Finland

Business ID: 0616827-7
Domicile: Lahti, Finland Alv. Rek