Binding loops

Ferry lashing ring 7T 120x120x20 mm

Product code: 161501060



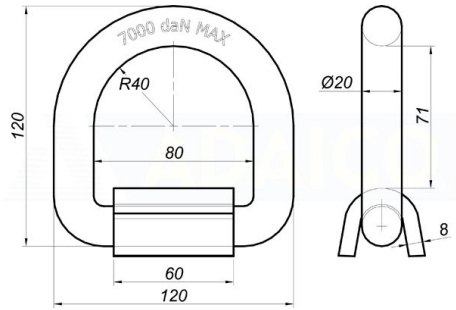

Weight: 1.12 kg

Description

Features:

LC = 7000 daN

Normative:

UNI EN 12640:2019 DIN 75410-1:2003 EN 29367-2 : 2000

Raw steel.

This product meets the requirements of EN 12640:2019. You can get the document from our sales or extranet.

Oy Parlok Trading AB
Askonkatu 13
FI-15100 LAHTI
Finland

Business ID: 0616827-7
Domicile: Lahti, Finland Alv. Rek