Steel profiles

Edge profile

Product code: 17762018

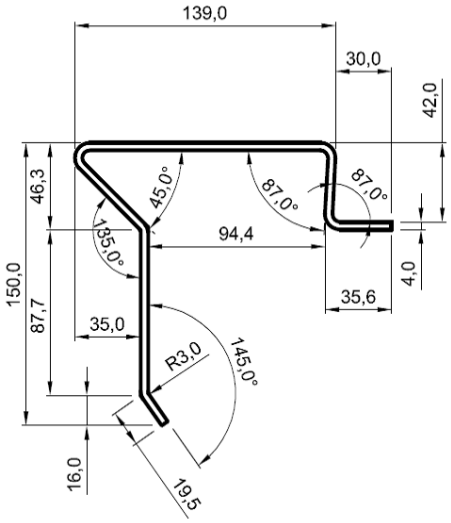

Oy Parlok Trading AB
Askonkatu 13
FI-15100 LAHTI
Finland

Business ID: 0616827-7
Domicile: Lahti, Finland Alv. Rek